ISSN 2395-1621

Waste Shredding Machine

#1Prof. R. D. Nipane, #2Mr. Basutkar. Vyankatesh. M, #3Mr. Datar. Maitreya. C, #4Mr. Otari. Amey. S, #5Mr. Sapkal. Sukhdev. A,

1rdnpvpit@gmail.com
2venky.basutkar@gmail.com
3maitreyacd@live.com
4ameyotari42@gmail.com
5tusharsapkal75@gmail.com

#1Assistant Professor, Mechanical Engineering
#2345Student, Mechanical Engineering

PVPIT, Bavdhan, Pune, Savitribai Phule Pune University

ABSTRACT

The main aim to make such a mechanical oriented project is to reduce the scrap volume and use it for recycle purpose properly. Now a days there is a wide usage of storage containers which have been used in hotels and canteens and for their storage large volume of space is required. In order to reduce the waste, we planned to create a container shredding machine that will reduce the volume of edible storage containers by precisely eighty percent. There are many researchers who have done work on design and analysis, but still there are multiple areas of scope regarding the design and analysis of this machine. This paper includes the design and details of a compact waste shredder which helps in reducing the volume of the generated waste. This machine's primary usage is to save space and to progress recycling.

Keywords: Compact, Volume, Waste, Shredder.

ARTICLE INFO

Article History

Received: 5th May 2017

Received in revised form :

5th May 2017

Accepted: 12th May 2017

Published online :

12th May 2017

I. INTRODUCTION

The main purpose of the project is to reduce and increase the amount of waste management space using the previously used waste storage. The design is environment friendly and uses simple properties such as mechanical edged cams. The design is done so that the process of designing, mechanism and force analysis are utilised thus creating a new machine. In order to reduce the waste, we planned to create a container shredding machine that will reduce the volume of edible storage containers by precisely eighty percent. This machine's primary usage is to save space and for recycling. It can be placed anywhere in park, restaurant, canteens, etc. In today's life most of the food items are packed in disposable containers. Cold drinks and other beverages also come in disposable containers. Commercial establishments like cafeteria and bars, have to deal with leftover disposable containers. Storage is often a problem and containers consume a lot of space, thereby increasing total volume of trash. The transportation cost is also high for moving such a huge amount of inflated waste. Thus this machine will help to recycle and maintain the environment too.

This project involves the process of designing the different parts of the waste management machine considering the forces and ergonomic factors for people to use. This project is mainly about generating a new concept of disposable waste shredder that would make waste management easier to bring anywhere and easier to locate and transport collected waste.

Initially, we observed and noted that waste in multiple restaurants and eateries were often consumed through packaged containers and the containers which were later disposed occupied a lot of disposal space. We thus decided to work on a project which will help in reducing the volume of waste which was disposed at similar food joints.

In the second stage, we decided to design a mechanised machine which would simply compress and squeeze the containers and then deploy a squeezed coin shaped blank which could be later sent for segregation and disposal or recycling.

Further on studying and gathering information on the concept, we came decided to design a pneumatic system which would use the freely available air and thus implement container crushing for project objective. Later in the calculation process we concluded that a disposable water bottle of a volume of 2 litres precise when enclosed with air, required a high amount of force which could not be exerted by a market ready pneumatic cylinder of a similar base dimension. Also, the bottle which was to be crushed thus to form a blank was to be specifically horizontal in nature and thus an arrangement for the same was necessary.

In the next stage, we studied in depth regarding the bottle crushing and waste management, we came across a paper shredder which put us up to an idea wherein we could simply shred the waste. Thus, we started working on the design of a shredder which would shred the waste which entered the machine in any possible direction thus reducing the space needed for the similar amount of waste.

II. LITERATURE REVIEW

Ajinkya S. Hande, in their research work carried out project on Methodology For Design & Fabrication of Portable Organic Waste Chopping Machin .Organic waste is fed uniformly through feeding drum and tray. Then the Shaft rotated at 1440 rpm through electric motor by means of pulleys makes the chopping drum to cut the waste by the effect of impact shear obtained from the shearing blades. The cut is also made inside the chopping house due to the effect of tensile, friction, and impact effect in chopping process. Then the cut pieces pass through the concave holes of the sieve & come out of the machine. The sieves of different sized holes can be used Agriculture is now one of the most important sectors it plays a vital role in Indian economy. In order to further develop this sector technology has become one of the main components. Typically, dealing with the agriculture sector can entail difficulties relating to a number of factors. Consequently, to overcome such problems, farmers are being encouraged to adopt innovative technology that suits their farm. Survey was carried out through product study, market study.

Can recycling is very important part of any family and community recycling program. Aluminium recycling is one of the easiest things you can do to help the environment. Recycling of can began long ago and started to become common practice back in early 1970"s. Can is 100% renewable. This means that can you take to your local recycling centre today becomes a new aluminium can. There are no waste products in the process of making a 100% renewable resources and one of the best things cans can be recycled. You might be surprised to know that within 60 days an aluminium can is able to go from your recycling centre and becomes a brand new can to be used by consumer.

A crusher is a machine designed to reduce large solid material object into a smaller volume or pieces. Crusher reduces the size or change the form of waste material so they can more easily disposed or recycled.

III. OBJECTIVES

- To create a machine to satisfy the needs of a first level waste management system to reduce the volume of waste being generated.
- To reduce the bit size of shredded waste, thus enhancing the safety of waste sorters and to help implement an automated waste sorting system based on waste material density.
- To make optimum use of available waste area by reducing the volume of the waste being generated.
- To prevent and reduce the injuries which are included in waste segregation and management; which lead to lively threats.
- To reduce and improve the waste management system

IV. METHODOLOGY

Initially, we observed and noted that waste in multiple restaurants and eateries were often consumed through packaged containers and the containers which were later disposed occupied a lot of disposal space. We thus decided to work on a project which will help in reducing the volume of waste which was disposed at similar food joints.

In the second stage, we decided to design a mechanised machine which would simply compress and squeeze the containers and then deploy a squeezed coin shaped blank which could be later sent for segregation and disposal or recycling.

The initial stage of the project was to develop a optimum design which is best in the manner of processing system and in manufacturing system. In that case the design of the project parameters we came across different aspects of optimum design. We select the best available design system in the market.

The next stage of the project was to manufacture the project as per the design parameters. The shredder is consists of electrical motor, shaft, gears for meshing of cutters which has been installed on the shaft. The Electric motor was designed to give optimum torque and power to process the mechanical cutters. In the last stage, trials proved in the incapacity of torque, which led to the selection of a torque converter selected from catalogue. The torque converter includes a worm and a worm gear.

V. DESIGN PARAMETERS

- The maximum container size of the disposable container was found to be the dimensions of a 2L water bottle which were 400 * 120mm. It is later calculated and found that the bottle exerted a maximum force under compression in accordance with volume.
- The bottle which is to be cut requires a certain amount of force which will be calculated. Based on the force which has been calculated a suitable durable material is to be selected. The material will be selected for the cutters which will cut the pressurised plastic bottle.
- Torque and Power which Design of the maximum spacing in between the shaft and the walls which will hold the cutters and help in cutting the plastic bottle/waste.
- is required for cutting the waste material which is to be developed by the two indirect cutting shafts which will be provided by the motor.
- The frame which will hold the cutter shafts.
- Bearings which will support the shaft ends and support and hold the waste which is to cut.
- Ergonomic considerations of a funnel which will support and carry the waste to the cutters which will help avoid human errors and accidents.

VI. DESIGN CALCULATIONS

- Shaft Calculations
  - Cutting force required to cut the bottle Length of shaft = 140 mm (Considering maximum diameter of bottle 120 mm)
  - Shear strength of PET (Plastic) = 55 N/mm2
  - Torque: Blade must cut the bottle initiating from tip. Thickness of blade = 4 mm
  - Shear strength of bottle = 55 N/mm2
  - Thickness of bottle = 1mm
  - Thickness of tool tip = 4 mm
  - Height of tool tip = 1 mm
  - Taking no. of blades = 17 (For 140 mm length of shaft)
  - Shear force required = Shear strength x area = 55 x 4 x 1 = 220 N
  - Diameter of cutting tool = 130 mm
  - Therefore, tip of tool is 65 mm from center of shaft
  - Torque required for cutting = 220 x 0.065 = 14.3 Nm
  - Force exerted per cutting blade = 220/Blade

  - Total force on all blades = 220 x 17 = 3740 N
  - Therefore force excerting per mm = 3740/140 = 26.71 N/mm
  - Calculating Maximum Bending Moment = (WL^2) / 8
    = (26.71 x 140 x 140) / 8 = 65439.5 Nmm
  - Torque = 14.3 x 1000 Nmm
  - Therefore equivalent torque = √M2+T2 = 66983.71 Nmm
  - Now to calculate shaft diameter:

τ = (16 Te / π D3) D3 = 16 Te / π τ = (16 x 66983.71) / (π x 90) D = 15.59 mm

Considering safety and nature of work, we are selecting diameter of shaft as 20 mm.

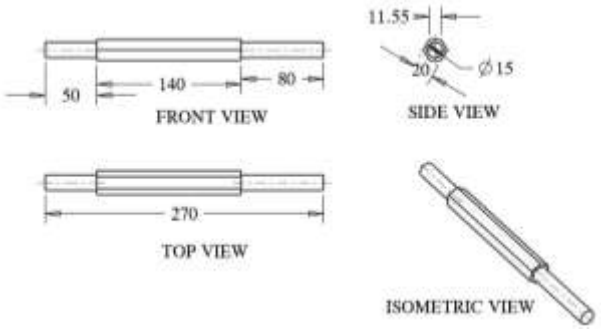

Fig. 1. Hexagonal Shaft

- Bearing calculations
  - Effective load (Pe) = X V Pr + Y Pa
  - As no forces are acting axially on shaft, taking Pa = 0, X = 1
  - Also, as inner race of bearing is rotating, taking value of V = 1
  - Therefore, Pe = V Pr = 1 x Pr
  - Now calculating reaction forces on shaft.

Total length = 140 mm
UDL acting = 26.71 N/mm
Therefore Ra = Rb = (26.71 x 140) / 2 = 1870 N
Hence, Pr = 1870 N
Therefore Pe = 1 x Pr = 1870 N

- Now, life of bearing, L10 = (Lh x 60 x N) / 106
- Taking Lh = 1000 hrs & N = 100 rpm
  L10 = 6
- Now static capacity of bearing

C = P (L10)1/3
= 1870 x (6)1/3
= 3398 N
= 3400 N
= 3.4 KN

So, inner diameter of bearing is 15 mm & load capacity is 3.4 KN. Therefore, selecting bearing from catalog
Bearing = 6202
D = 35 mm
d = 15 mm
t = 11 mm
Dynamic capacity = 7.65 KN
Static Capacity = 3.72 KN

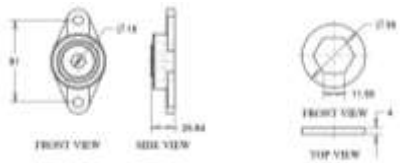

Fig. 2. Pedestal Bearing and Spacer

VII.MATERIAL USED AND PROCESS SELECTED

Table. 1. Bill Of Materials and Process Selected

Part Name	**Material Used & Process Selected**
Motor	MGM Motor, 0.5 HP, 0.36 KW, 1350 RPM, Pre-Geared.
Coupling	Flange Coupling
Bearing	SKF 6202, Pedestal Type
Shaft	Mild Steel, Hexagonal Extruded
Cutter Blades	Mild Steel, Laser Cut
Support Walls	Mild Steel, Milling
Hopper	Aluminium/Mild Steel Sheet metal
Stationery Blades	Mild Steel, Laser Cut
Washers	Mild Steel, Laser Cut
Bin	Aluminium/Mild steel Sheet metal
Frame	Mild Steel, Arc Welding
Fasteners	Steel, Standard Available

VIII. CONSTRUCTION & WORKING

A] Construction

For construction, first material is procured and sent for further processing. The individual parts are manufactured taking reference of the bill of materials in pint VII. The parts are then taken for assembly.

Initially, a hexagonal shaft is selected so that we get 6 working faces and 6 varying angles for the cutter blades to be mounted. The hexagonal shaft is turned and produces in an extrusion form where the ends are circular. The turning is done using a lathe machine. The cutters are the mounted over the shaft varying each angle by a different face of the shaft. The cutters are further spaced by washers thus to avoid contact and achieve waste passage spacing.

After the assembly of cutters over the shaft, the walls which will hold the shaft are inserted. The laser cut walls have a washer before the end cutters.

Then the pedestal bearings are mounted on both sides to ensure support.

After partial assembly, the remaining support walls are taken which ensure the stability of the support blades. The support blades are welded on the side walls which have pre-cut slots for blade mounting purposes. The two support walls are then welded with the partial assembly to form a box like structure. The shaft which comes through the pedestal bearing is then mounted with a flange coupling. The second end of coupling is attached to the output of torque converter. The torque converter alignment is ensured for maximum power transfer efficiency and minimum transfer losses. The torque converter is driven using a 0.5HP motor as stated above in the bill of materials. The torque converter is again coupled with a flange coupling and alignment is to be ensured again. The total assembly is mounted over a frame which helps in vibration absorption purposes. The couplings are provided with sleeves to ensure safety in case of failure.

In the final stage, a regular dustbin is put under the main machine box which helps in collecting the shredded waste. Further a hopper/funnel is fixed over the main machine assembly using lock tights. The funnel ensures worker safety and is typically of a full arm length. The bin and the funnel are made out of Mild steel sheets which are folded riveted and fixed using lock tight adhesive.

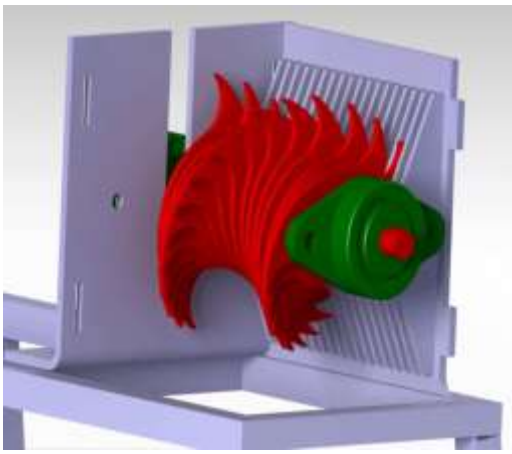

Fig. 3. Cutter and Shaft Assembly

B] Working

The motor is started and functioning of the machine and machine blades are ensured. The revolution of blades is checked to avoid friction and breakage or wear due to contact.

The motor drives the torque convertor worm which in turn drives the worm wheel. The worm wheel drives the shaft which powers the revolution of the cutter blades.

In the next step, we provide input for the machine. The waste is put through the funnel. The waste is captured by the revolving cutter blade and is pressed against the stationary blades. The stationary blades withstand the reaction force and thus the waste is extruded through the gaps in the cutter blades. As the machine is an interlocking structure with a minor clearance in between blades; maximum extrusion of waste through the gaps is ensured. The waste which escapes through clearance is again captured by the cutter blade in upcoming revolution cycle. The waste is then shredded either into fine bits or into shredded strips in case of elastic materials. The shredded volume is less as compared to the waste before shredding as maximum space is occupied by the shredded waste.

IX. ADVANTAGES

- Optimum waste space utilization
- Easier waste handling
- Optimum waste segregation without labour injuries
- Ease of application in any and every area
- Ease of access
- High portability

X. DISADVANTAGES

- High power requirements
- Only specific dimensional materials and material having dimension below the specified dimension can be shredded.
- High maintenance time and difficult to replace cutting part

XI. CONCLUSION

The project involves the process of designing the different parts of the waste management machine considering the forces and ergonomic factors for people to use. The project is mainly about generating a new concept of disposable waste shredder that would make waste management easier to bring anywhere and easier to locate and transport collected waste. The project also involves changes in power drives for the machine thus to gain increment in torque parameter and achieve successful shredding using a low power motor.

In the final stage, we studied in depth regarding the bottle crushing and waste management, we came across a paper shredder which put us up to an idea wherein we could simply extrude and shred the waste. Based on statistics and analysis required for the feasibility of container shredding machine; we calculated and analysed an optimum machine design which will reach Layman's terms based on common person handling. The dimensions are specified and support bearings are selected referring the manufacturer's catalogue.

Thus, all the machine requirements have been achieved and the machine design has been completed. The machine is ready for application purposes.

XII.FUTURE SCOPE

- Applicable in Municipal waste management
- Application for malls and food joints n eateries
- Automatic activation and deactivation of machine based on waste input
- Machine optimization for various application
- Machine optimization for miniature applications
- Cost effective manufacturing for multiple applications
- Customization on customer end application
- System automation for variable loads and consumptions
- Batch shredding of waste
- Automated batch shredding in case of large waste sites
- Customer safety and accident prevention
- Reduction in maintenance and down time
- Increment of machine life span
- Application based on corrosion resistance in case of wet waste shredding
- Waste segregation based on waste material
- Aesthetic representation of waste shredding concept

XIII. ACKNOWLEDGEMENT

We take this opportunity to thank our teachers and our guide who provided constant encouragement and made it possible for us to take up challenge doing this project. We are grateful to Prof.R.D.Nipane for his technical support, valuable guidance, encouragement and consistent help. He is constant source of inspiration and information for us. Last but not least, we are thankful to our entire staff of mechanical department for their timely help and guidance at various stages of the project.

REFERENCES

[1]Alpha Engineering Company, and Roadrunner Trucking 4th Period-Tech, Paper presented by Kartikey Desai, Courtney Jones, Sarah Kasi, Jon Ko

[2]Ajinkya S.Hande et al. “Methodology For Design & Fabrication of Portable Organic Waste Chopping Machine To Obtain Compost -A Review” IJIRST –International Journal for Innovative Research in Science & Technology| Volume 1

[3]P.B.Khope and J.P.Modak “Design of experimental set-up for establishing empirical relationship for chaff cutter energized by human powered flywheel motor” Journal of Agricultural Technology 2013 Vol. 9(4): 779-791.

[4]“The Can Crusher” by Stanley Andrews & Brandon Jefferson ; 01 Aug 2013

[5]“Can Crusher Project” by Kartikey Desai, Courtney Jones, Sarah Kasi, and Jon Ko ; 21 March 2008

[6]International Journal of Mechanical and Industrial Technology ISSN 2348-7593 (Online) Vol. 2, Issue 2, pp: (155-159), Month: October 2014 - March 2015

[7] B.U.Bhandari , Tata McGrawHill; Design Of Machine Parts,

